ISSN 2395-1621

Digitalization In India Using RFID Technology With IOT

#1Mohini B., #2Dhanashri H., #3Akanksha P., #4Monika M..
#5Prof.D.H.Dewarde

1mohiniborude13@gmail.com
2dhanashrihajare96@gmail.com
3akankshapawar101@gmail.com
4monikamunot96@gmail.com
5dewarde.digambar73@gmail.com

Computer Department, Pune University
JSPM Narhe Technical Campus, Pune.

ABSTRACT

A data security integrated system, based on the server, which uses RFID technology to combine functions of physical access control, computers access control and management. Using RFID Reader for scanning particular person there are also chances of fraud. This can overcome using Fingerprint sensor. Suppose that the security level of such digital signature system can be further increased using RFID tags in addition to smart digital services. This allows preventing an unauthorized use of the smart card carrying the secret key. Intellectual RFID tags can help us when a physical access control system is not installed or when it is impossible or inexpedient to connect such system to the digital signature system and the computers access control and management system. This tag is an additional authentication factor required to gain permission to use the cryptographic smart card for signing a document. The presence detection/access control function is comprised of a wired/wireless sensor network of readers that is installed to detect person information with tags.

Keywords: Controller, RFID Reader, Tag

ARTICLE INFO

Article History

Received: 15th February 2018

Received in revised form : 15th February 2018

Accepted: 20th February 2018

Published online : 24th February 2018

I. INTRODUCTION

The Bharat Broadband Network Limited (BBNL) which executes the National Optical Fibre Network project will be the custodian of Digital India (DI) project. BBNL had been ordering United Telecom Limited to connect 250,000 village through GPON to ensure FTTH based broadband. This will provide the first basic setup to achieve towards Digital India and is expected to be completed by 2017.The administration is provision to create 28,000 seats of BPOs in various land and set up at least one Common Service Centre in each of the gram punchayet in the state.

The 2016 Union budget of India announced 11 technology initiatives including the use data analytics to nab tax evaders, creating a substantial opportunity for IT companies to build out the systems that will be required. Six crore rural households will be covered by digital literancy mission.It is planned to connect 550 farmer markets in the country through the use of technology.

Out of 10% English speaking Indians, only 2% reside in rural areas. Rest everyone depends on their vernacular language for all living their lives. However, as of now, email addresses are being created in English language. To connect rural India with the Digital India, the Government of India impelled email services provider giants including Gmail, office and rediff to provide email address in regional Languages.

The ubiquitous nature of the Internet allows most of today's information technology systems to provide services that are of a global scope. A traveler in India may use Airbnb to book a hotel in Japan and may use Google maps to find its location. A student in the United States may use Facebook to chat with her family in Brazil and to send them a gift via Amazon. As online users enjoy the convenience of global services, data transmission across borders and information privacy becomes an important consideration. Therefore, providing services and systems that are privacy-preserving to users across the regions is a challenging mission. So, what we are experiencing nowadays is digital life, in every

day to day life we are dependent on digital way of doing that work. But there is still one case where we are using papers for doing that work which is government documents or any documents educational, medical etc. We have to carry file of documents while we are going for any government work such as for issuing driving license. So we are proposing digital solution on this problem by replacing bunch of documents with just single RFID card.

II. MATHEMATICAL MODEL

Problem Description and System.

Let S be Closed system defined as, S = { Ip, Op, Ss, Su, Fi,A}

To select the training documents and give the path of the folder and perform various actions from the set of actions A so that Su state can beattained.

S ={Ip, Op, Ss, Su, Fi,A}
Where,
Ip=Username, Password, Query Task to perform
Op=Document storage, Fingerprint scanning, Feedback
Set of actions =A={F1,F2,F3,F4}
Where,
F1 =upload documents
F2 = scan RFID & fingerprint
F3 = display documents
F4 = update documents
S- Set of User'sstates

Ss={rest state, login state, selection of training documents, learning process, selection of testing documents, classification of testing documents, displaying the category as theresult}

Su- success state is after authentication of fingerprint and RFID scanning all documents are getting displayed.

Fi- failed to authenticate user's fingerprint due to hardware problem or may be user is not registered.

III. LITERATURE SURVEY

While developing the proposed system we should unify the following types of communicating devices:

- smart cards;
- RFID tags;
- RFID readers;
- a variety of physical access control system components, such as electromechanical and magnetic locks, tourniquets, tripods and barriers.

To increase the efficiency of access control systems we can use active access control devices or use passive access control devices with specific properties such as secured object masking by means of radiation absorption, reflection or diffraction. The RFID tag is an additional authentication factor required to gain permission to use the cryptographic smart card for accessing a document.[9]

Password authentication is so convenient that it is widely used for user identification. However, such password authentication method is not robust enough if the legal owner is unaware of it. In this document, we propose an integrated technique approach to enhance user identification. We adopt keystroke dynamics as a biometric to strength conventional password mechanism and keep these characteristic values into RFID cards as pattern template for user identification.

It mainly presents our proposed authentication system supporting with keystroke dynamics as a biometric for authentication uses inter-key delays of the password and the account for useridentification in the system design. It shows that the proposed password authentication system with keystroke dynamics could effectively improve system security.[10]

Using RFID technology in digital signature schemes allows to increase their security. Even low-end RFID tags can add one more security level when combined with physical access control systems.
Intellectual RFID tags with possibility of strong mutual authentication with smart cards allow to provide unauthorized access to digital signature secret keys: they can be used after successful mutual authentication only.[9].

Monitoring the keyboard inputs thousands of times, and attempts to identify them based on habitual rhythm patterns in the way they type this is the process of analyzing way user types at a terminal of keystroke dynamic's . Such the automatic pattern recognition system widely applied to computer access security is gaining popularity because it is easy to implement without extra hardware but the keyboard.As usual, the keystroke dynamic for biometric authentication system involves representation, extraction, and classification. [11].

IV. OVERVIEW OF THE SYSTEM

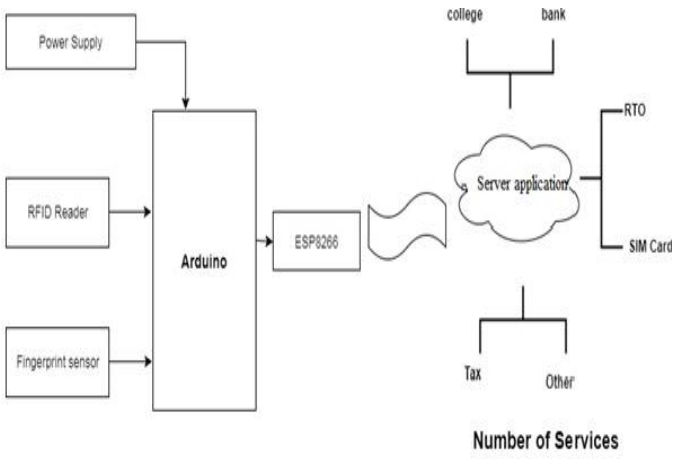

Fig 1. System structure

In daily life the processes or services which are especially for the people, to get these services properly and within time is important. If we go to buy a SIM card to mobile shop,

then we have to cross verify the fingerprint of that particular user or customer with the Adhar card number. The process becomes hectic and so lengthy till SIM card activation. There are so many such services which take too much time, manpower and system resource.

Such services are related to RTO, College admission, Bank, Passport and so many. These all services are only for the Indian people but these are so time consuming and there are also the chances of fraud in getting services.

So we are making all services digital. In this project we are using server as cloud for storing the necessary documents for 10 peoples for demo. The particular documents we can use where they become necessary. We are using RFID Reader for scanning particular person in this there are also chances of fraud. This we can overcome using Fingerprint sensor. Suppose I for opening a account in bank I have to just carry a RFID tag.The bankers will scan that card and also check fingerprint.

V. CONCLUSION

In this paper, it mainly presents our proposed authentication system supporting with keystroke dynamics as a biometric for authentication. RFID Tag is like a smart card in which many documents are stored which related to |RTO, Bank, College so it is easy task to people to access this document anywhere anytime.It shows that the proposed password authentication system with keystroke dynamics could effectively improve system security.

REFRENCES

[1] .P. Solic, J. Radic, N. Rozic, ”Software defined radio based implementation of RFID tag in next generation mobiles”, IEEE Transactions on Consumer Electronics, vol. 58, no. 3, pp. 1051-1055, August 2012.

[2]M. Vazquez-Briseno, F. I. Hirata, J. de Dios Sanchez-Lopes, E. Jimenez-Garcia, C. Navarro-Cota, J. I. Nieto-Hipolito, Dr. Ioannis Deliyannis, ”Using RFID/NFC and QR-Code in Mobile Phones to Link the Physical and the Digital World”, Interactive Multimedia, 2012, ISBN 978953510224-3.

[3] R. Ramani, S. Selvaraju, S. Valarmathy, P. Niranjan, ”Bank Locker security System Based on RFID and GSM Technology”, International Journal of Computer Applications (IJCA) (0975- 8887) Volume 57-No. 18, November 2012.

[4]Anil K. Jain, Arun Ross Sharath Pankanti. (2012). ”Biometrics: A Tool for Information Security.” IEEE Transactions On Information Forensics And Security.

[5]Rajesh C. Pingle And P.B.Borole,”Automatic Rationing For Public Distribution System(PDS) using RFID and GSM Module to Prevent Irregularities”,HCTL Open International Journal Of Technogy Innvoations and Reasearch,vol 2,pp.1 02-111,Mar 2013.

[6] S.Valarmathy,R.Ramani,” Automatic Ration Material Distributions Based on GSM and RFID Technology” I.J. Intelligent Systems and Applications,2013.

[7]Parvathy A,Venkata Rohit Raj,Venumadhav ,Manikanta,”RFID Based Exam Hall Maintenance System”,IJCA Special Issue on ”Artificial Intelligence Techniques-Novel Approaches Practical Applications”AIT,2011.

[8] K.Balakarthik,”Closed-Based Ration Card System Using RFID And GSM Technology, ”vol.2,Issue 4,Apr 2013

[9]. Andrey Larchikov, Sergey Panasenko, Alexander V. Pimenov, Petr Timofeev(2016).”Combining RFID-Based Physical Access Control Systems with Digital Signature Systems to Increase Their Security”.

[10]. Feng-jung Liu,ehun-wei Tseng,Department of Infonnation ManagementCheng Shiu University(2016).” Design and Implementation of a RFID-basedAuthentication System by Using Keystroke Dynamics”.

[11].F. Monrose, A. Rubin, Authentication via keystroke dynamics. Fourth ACM Conference on Computer and Communications Security, 1997.

[12].S.Valarmathy,R.Ramani”Automatic Ration Material Distributions Based on GSM And RFID Technology” I.J.Intellegent System And Application,2013,11,47-54

[13].Parvathy A,Venkata Rohit Raj ,Venumadhav ,Mamikanta “RFID Based Exam Hall Maintaince System”,IJCA Specially Issue on “Artificial Intelligence Techniques-Novel Approaches and Practical Applications”AIT,2011

[14]. M. Vazquez-Briseno, F. I. Hirata, J. de Dios Sanchez-Lopes, E. Jimenez-Garcia, C. Navarro-Cota and J. I. Nieto-Hipolito. *Using RFID/NFC and QR-Code in Mobile Phones to Link the Physical and the Digital World*, Interactive Multimedia, Dr. Ioannis Deliyannis (Ed.), ISBN: 978-953-51-0224-3, InTech, 2012.

[15].P. Solic, J. Radić, N. Rozic. *Software defined radio based implementation of RFID tag in next generation mobiles*, IEEE Transactions on Consumer Electronics, vol. 58, no. 3, pp. 1051-1055, August 2012.

